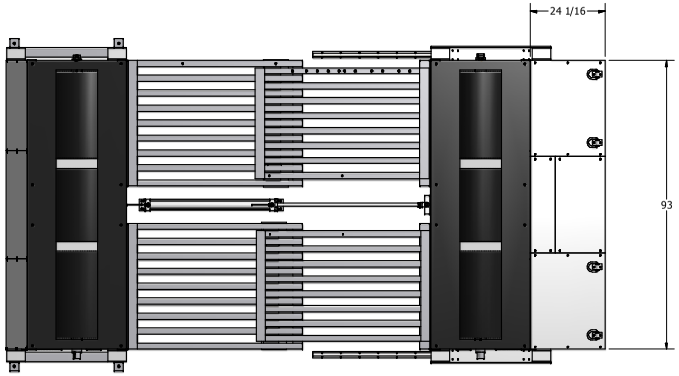

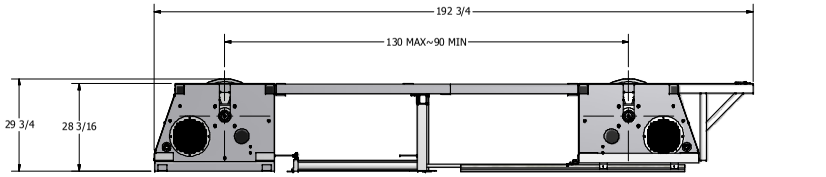

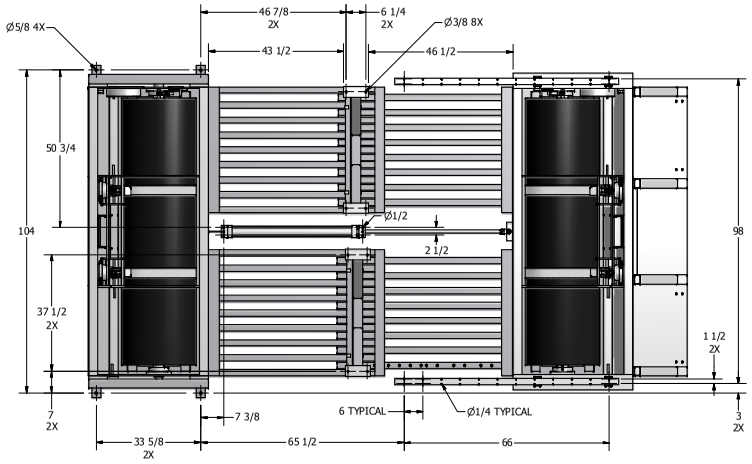

BOTTOM VIEW

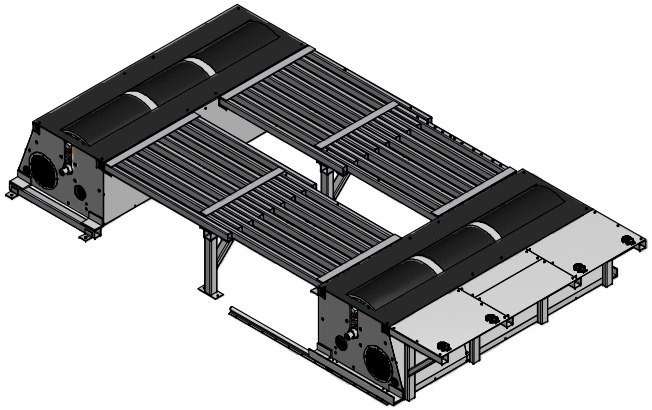

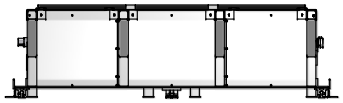

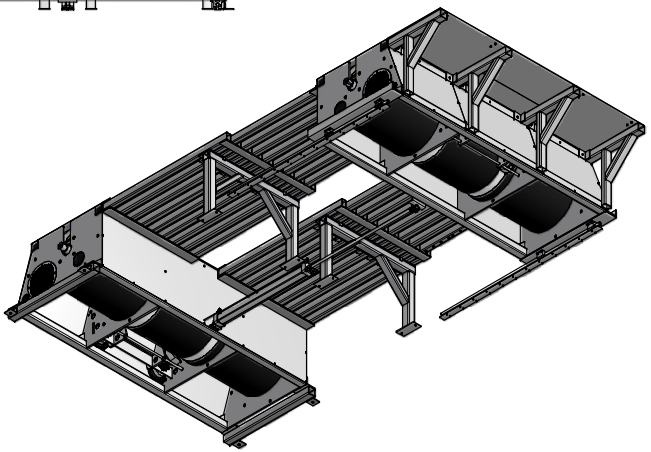

CONFIDENTIAL-PROPRIETARY
THIS DRAWING IS THE PROPERTY OF DYNOCOM INDUSTRIES, AND IS SUBJECT TO RETURN UPON REQUEST. THE DRAWING INCLUDES CONFIDENTIAL AND PROPRIETARY INFORMATION OF DYNOCOM INDUSTRIES, AND IS LOANED IN CONFIDENCE WITH THE UNDERSTANDING THAT IT IS NOT TO BE COPIED OR REPRODUCED WITHOUT EXPRESS WRITTEN PERMISSION, AND THAT NEITHER THE DRAWINGS NOR INFORMATION HEREIN BE USED ADVERSLY TO DYNOCOM INDUSTRIES.

TOLERANCES
(UNLESS NOTED OTHERWISE)
.X ± .04"
.XX ± .020"
.XXX ± .005"
FRACTIONAL ± 1/32"
ANGULAR ± 1/2
BREAK SHARP CORNERS: .01" X 45
SURFACE FINISH" 125

THIRD ANGLE PROJECTION

DYNOCOM INDUSTRIES INC.
Automotive Software & Hardware Data Systems

DESCRIPTION OF PART: ASSY
AWD 7500

DATE	3/6/2011
CHECKED	
DESIGNER	ESTRADA
MODEL NUMBER	
NEXT ASSEMBLY	
SCALE	
DRAWING NUMBER	AWD 7500
REVISION LETTER	-